# ONFI Technical Errata

| | |
|---|---|
| **Errata ID** | **008** |
| **Affected Spec Ver.** | **ONFI 3.0, 3.1, 3.2, 4.0** |
| **Corrected Spec Ver.** | |

Submission info

| Name | Company | Date |
|---|---|---|
| Terry Grunzke | Micron | 2/6/15 |

The erratum adds the requirement that DQS shall be held high throughout the Volume Select command sequence.

To support the ability to bring CE_n high during a data input sequence, a DQS toggle may cause Volume reversion. Thus, to avoid unwanted Volume reversion when the Volume Select command is issued, DQS shall be held high throughout the Volume Select command sequence.

Description of the specification change

***Modify Section 5.24 "Volume Select Definition", shown below:***

This command is accepted by all NAND Targets that are connected to a particular Host Target (refer to section **Error! Reference source not found.**). The command may be executed with any LUN on the Volume in any state. The Volume Select command may only be issued as the first command after CE_n is pulled low; CE_n shall have remained high for tCEH in order for the Volume Select command to be properly received by all NAND Targets connected to the Host Target. DQS (DQS_t) shall remain high for the entire Volume Select command sequence.

***Modify Section 5.24 Figure 110 "Volume Select timing diagram", shown below:***

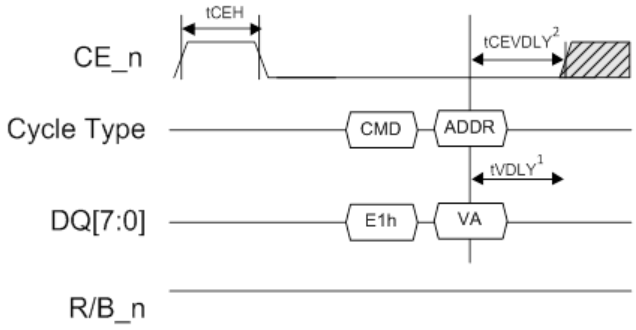


**Figure 1 Volume Select timing diagram**

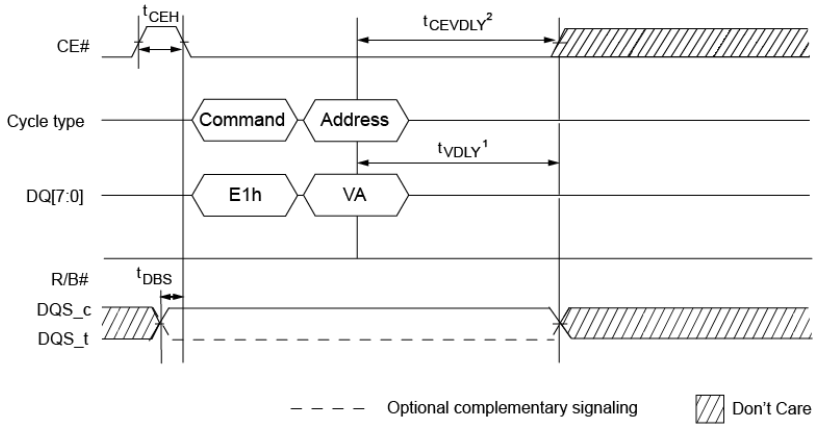


**Figure 2 Volume Select timing diagram**

Disposition log

| | |
|---|---|
| 2/6/2015 | Erratum captured. |

*Technical input submitted to the ONFI Workgroup is subject to the terms of the ONFI contributor's agreement.*