ONFI Technical Errata

Errata ID	**005**
Affected Spec Ver.	**ONFI 1.0**
Corrected Spec Ver.	

Submission info

Name	Company	Date
Amber Huffman	Intel	3/4/2007

Description of the specification technical flaw (add space as needed)

The specification does not show tADL in any Program definition to specify how it the parameter applies. This erratum updates the appropriate Program descriptions to specify tADL.

Description of the correction

Update Figure 32 to specify tADL as shown:

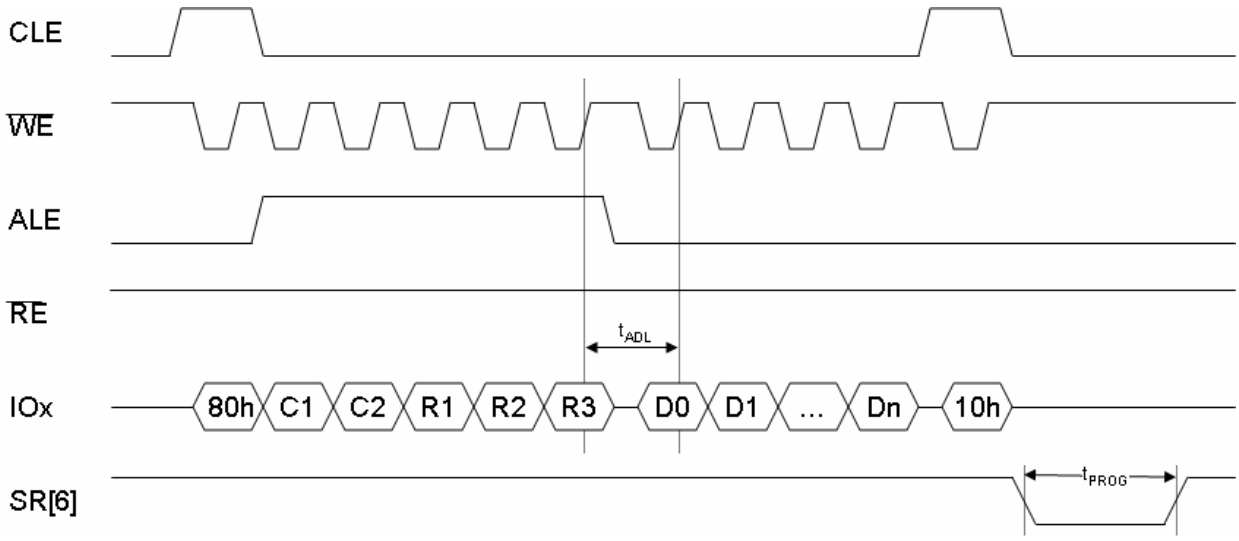

Figure 32 Page Program timing

Update Figure 33 to specify tADL as shown:

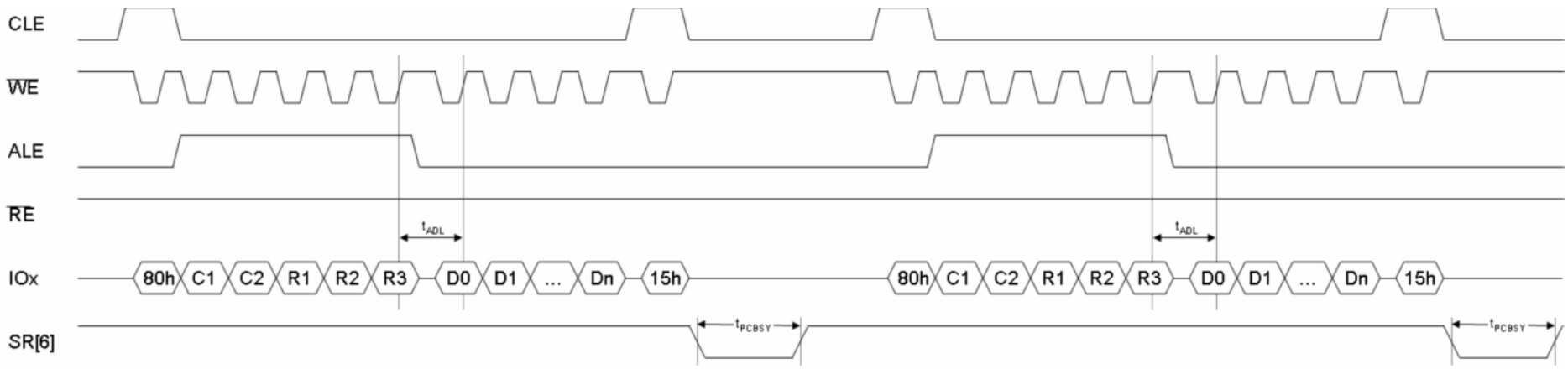

Figure 33 Page Cache Program timing, start of operations

Update Figure 34 to specify tADL as shown:

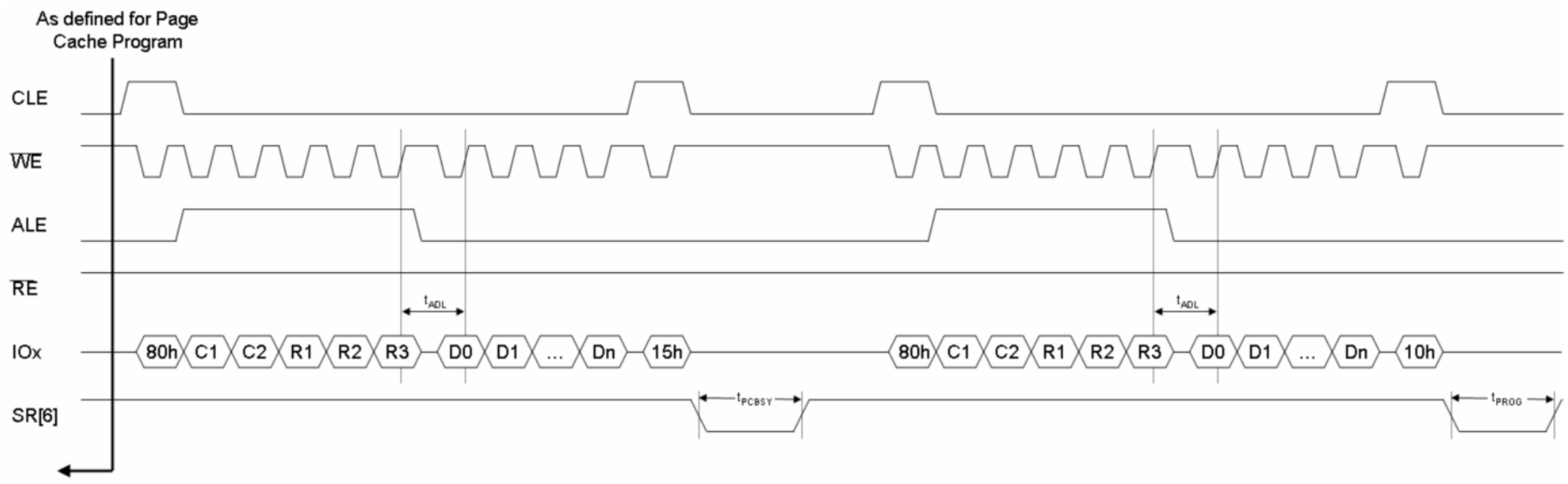

Figure 34 Page Cache Program timing, end of operations

Update Figure 37 to specify tADL and tCCS as shown:

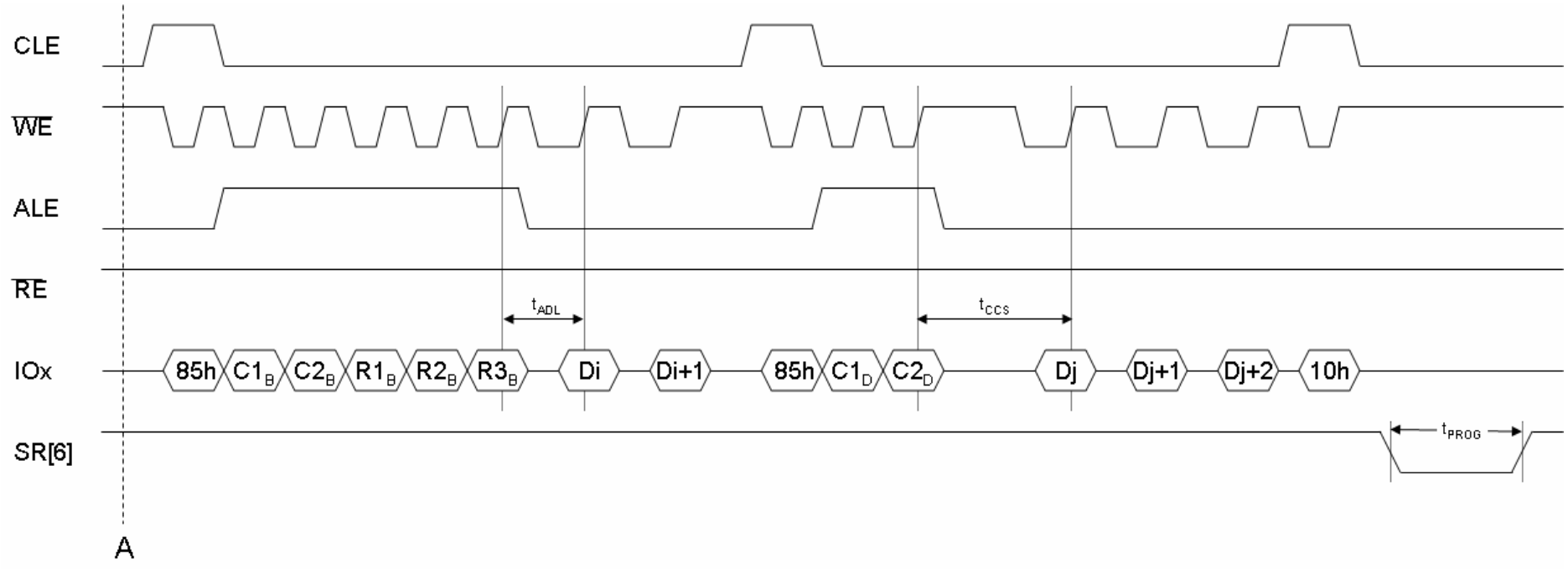

Figure 37 Copyback with data modification

Update Figure 44 to specify tADL as shown:

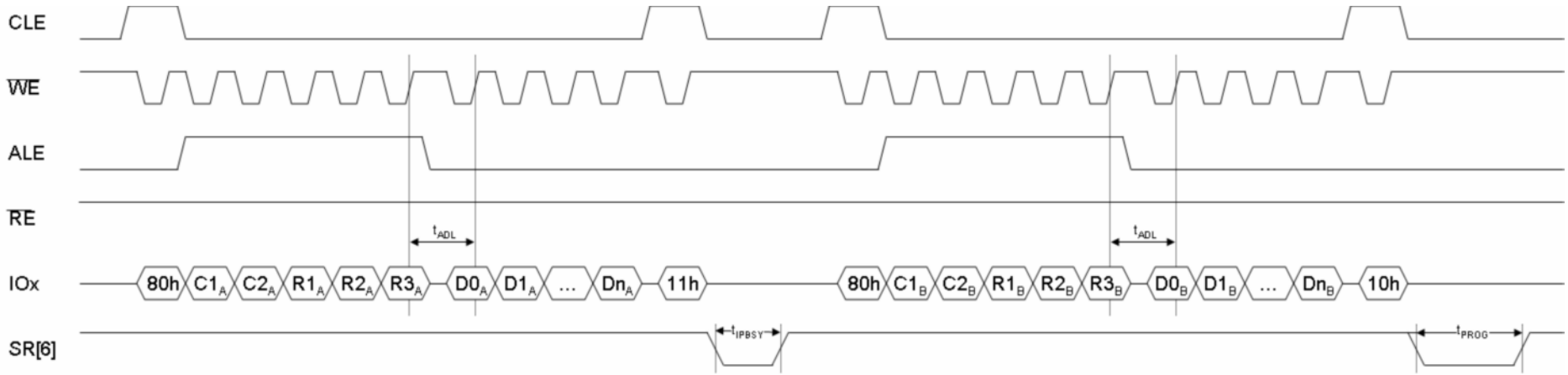

Figure 44 Interleaved Page Program timing

Disposition log

3/4/2007	Erratum captured
5/18/2007	Erratum ratified

Technical input submitted to the ONFI Workgroup is subject to the terms of the ONFI contributor's agreement.